TOTO

FAUCETS

TBG10304V
TBN01001B

GB Series
Single Lever Shower Mixer
with Diverter

Features

- Design Concept is Gorgeous and Advance.
- Easy Installation and Usage
- Long lasting, COMFORT GLIDE mechanism for a smooth operation

Specifications

Finish:	Chrome
Material:	Brass
Water Pressure:	0.05MPa~1.0MPa

Parts description

- **TBG10304V**
  Single Lever Shower Mixer with Diverter
- **TBN01001B**
  Concealed Box

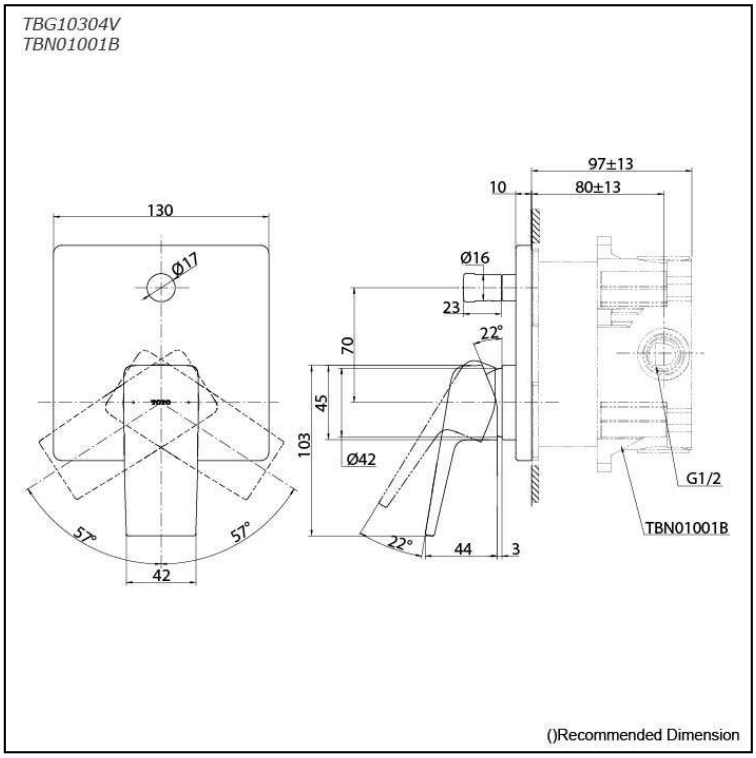

Please consult a TOTO representative for more details

All rights reserved by TOTO company. Specifications and sizes are subject to change without notice.