TOTO

FAUCETS

TLS04309B

LF Series
Wall-Mount Single Lever Lavatory Faucet
(Long Spout) (w/o Pop-up Waste)

Features

- Design Concept is Life and Flex.
- TOTO original cartridge for smooth control
- High corrosion resistance plating
- TOTO aerated water technology, ECOCAP adds air to the water to achieve full water jet with less amount of water usage.

Specifications

Finish:	Chrome
Material:	Brass
Water Pressure:	0.05Mpa~1.0Mpa

Parts description

- **TLS04309B**
  Wall-Mount Single Lever Lavatory Faucet (Long Spout) w/o waste fitting

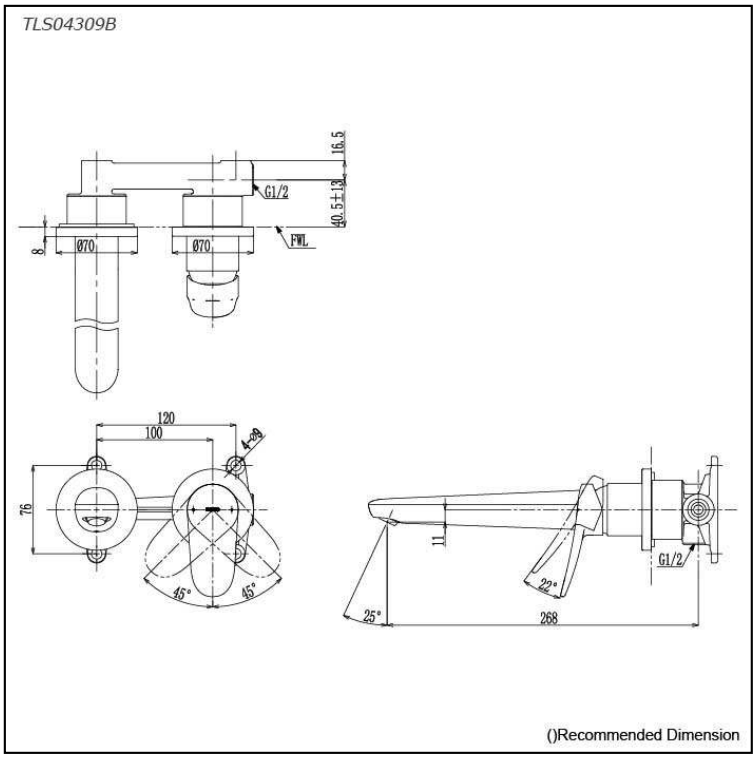

Please consult a TOTO representative for more details

All rights reserved by TOTO company. Specifications and sizes are subject to change without notice.

FAUCETS

Flow Rate

TLS04309B

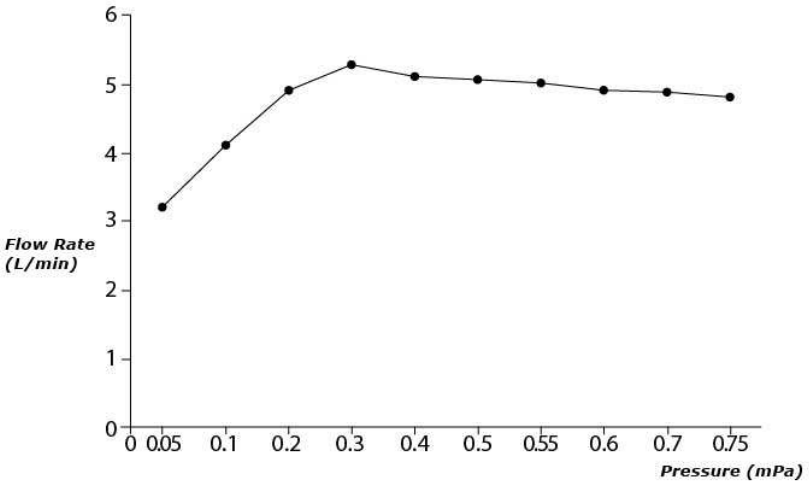

Please consult a TOTO representative for more details

All rights reserved by TOTO company. Specifications and sizes are subject to change without notice.