TOTO

Perfection by Design

Type No.	:	TX119LX
Description	:	8" Center Basin Mixer c/w 1" Pop Up Waste

Technical Specification :

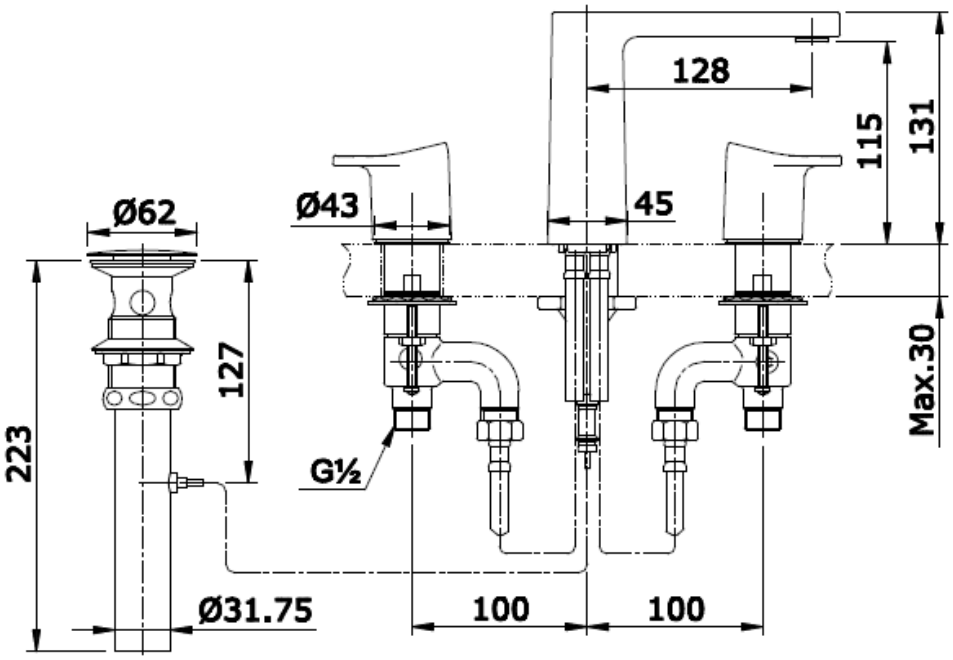

Copyright © W. ATELIER SDN. BHD., All rights reserved.

All photos and specification in this brochure are only for illustration and do not necessarily represent the final standard specification. Manufacturer reserve the rights to make further improvements and changes, where appropriate during design development. Therefore, they shall not form part of an offer or contract.