TOTO

LAVATORIES

Console Lavatory

LW573J
LW573JW/F

Features

- Round, sleek and modern design console lavatory

Specifications

Size:	420W x 420D x 125H mm
Material:	Ceramic

Parts description

Faucet not included

- **LW573J**
  Console Lavatory w/o Brackets
- **LW573JW/F**
  Console Lavatory w/ Brackets

Colors

White

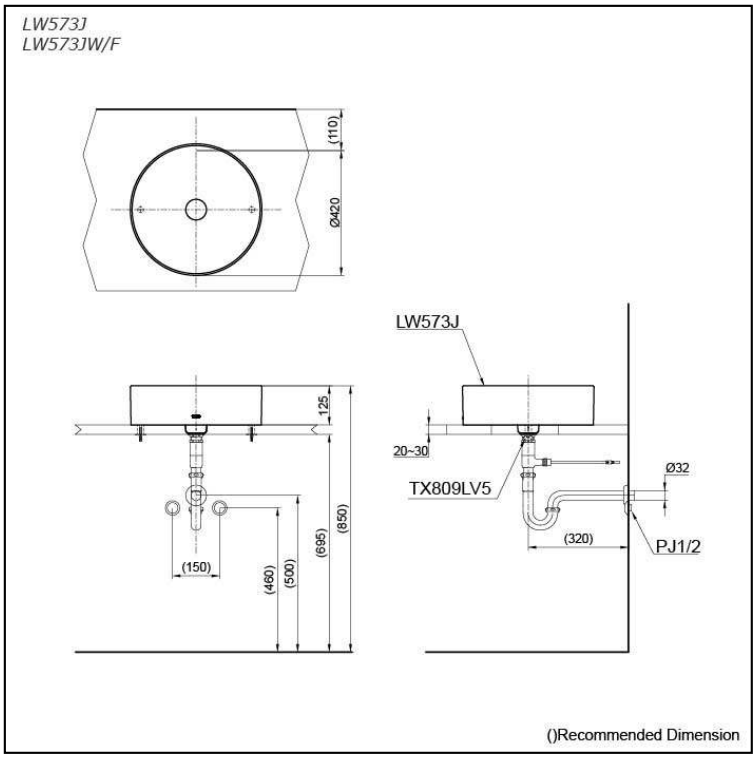

Please consult a TOTO representative for more details

All rights reserved by TOTO company. Specifications and sizes are subject to change without notice.