TOTO

LAVATORIES

Console Lavatory

LW648CJW/F
LW648JW/F

Features

- Board Stylish Design
- Rear overflow

Specifications

Size:	795W x 495D x 115H mm
Material:	Ceramic

Parts description

Faucet not included

- **LW648CJ**
  Console Lavatory (Single Hole Faucet)
- **LW648J**
  Console Lavatory (For 8” Faucet)
- **TX809LV5**
  Bracket

Colors

White

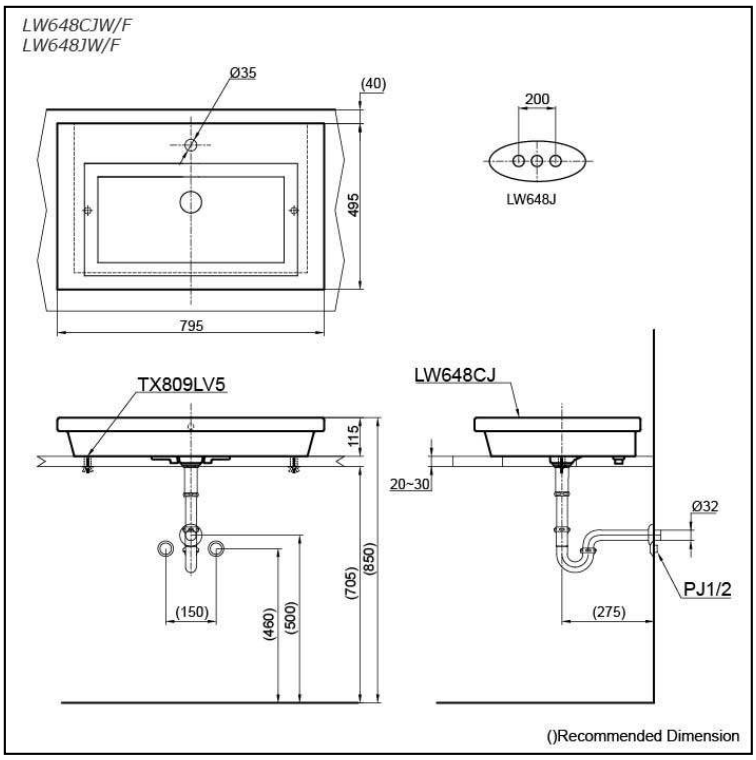

Please consult a TOTO representative for more details

All rights reserved by TOTO company. Specifications and sizes are subject to change without notice.