TOTO

FAUCETS

TLG10307BB

GB Series
Wall-Mount Single Lever Lavatory Faucet
(Short Spout) (w/o Pop-up Waste)

Features

- Stately squareness and beveled edges imbue a space with dignity
- Gently beveled with balanced highlights accentuate the shape of the gradually narrowing spout
- Easy Installation and Usage
- Long lasting, COMFORT GLIDE mechanism for a smooth operation

Specifications

Finish:	Chrome
Material:	Brass
Water Pressure:	0.05MPa~1.0MPa

Parts description

- **TLG10307BB**
  Wall Mount Single Lever Lavatory Faucet (Short Spout) (w/o Waste Fittings)

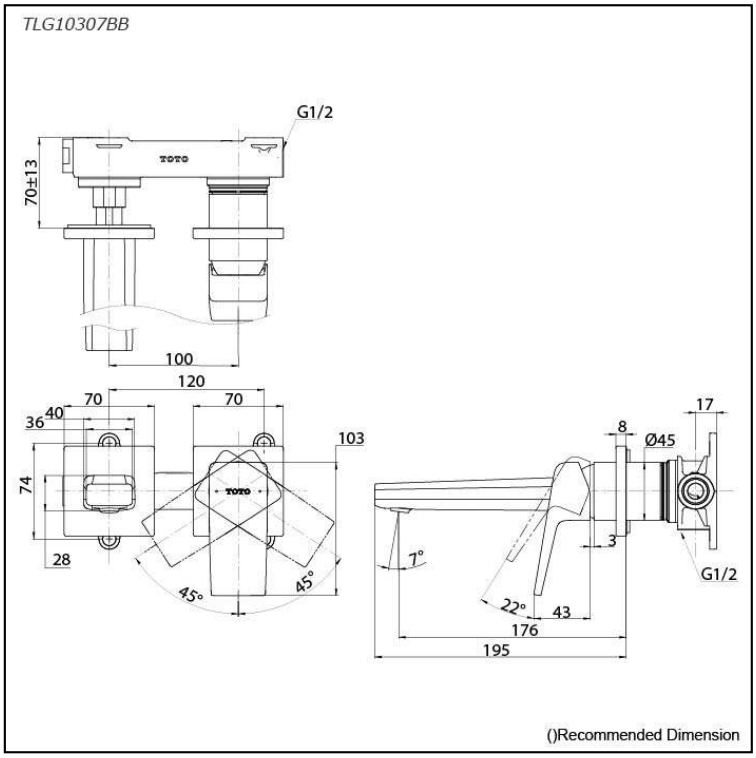

Please consult a TOTO representative for more details

All rights reserved by TOTO company. Specifications and sizes are subject to change without notice.

FAUCETS

Flow Rate

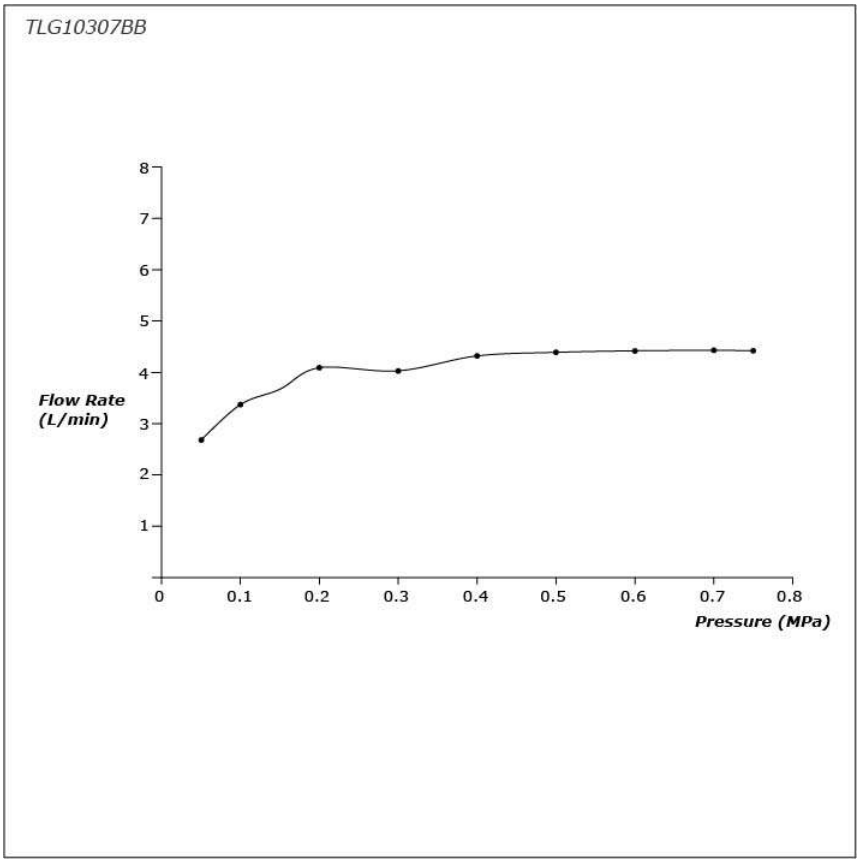

Please consult a TOTO representative for more details

All rights reserved by TOTO company. Specifications and sizes are subject to change without notice.