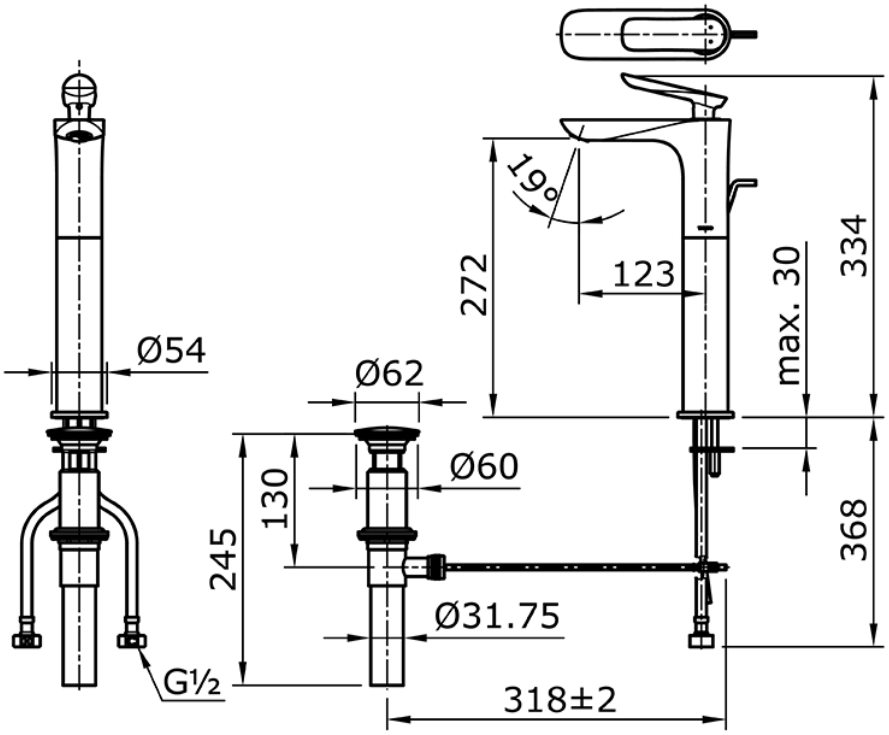TX 116 KHA