TX 119 KHA

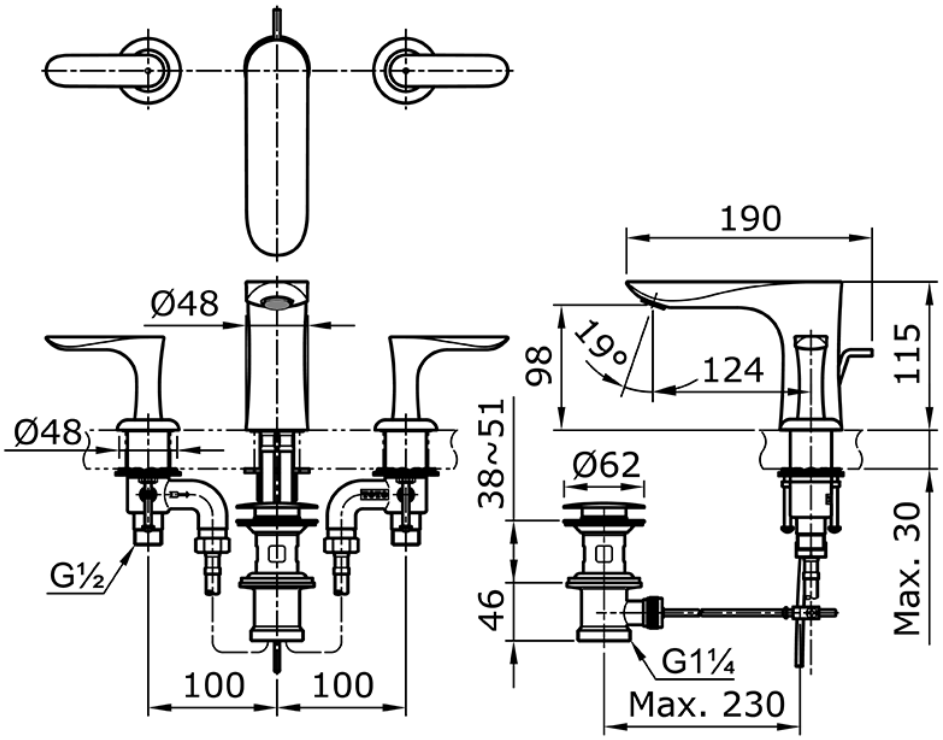
190
Ø48
19°
98
124
115
Ø48
38~51
Ø62
Max. 30
G½
46
G1¼
100
100
Max. 230